Identifying imaging genetic associations via regional morphometricity estimation

Jingxuan Bao[1*], Zixuan Wen[1*], Mansu Kim[1], Andrew J. Saykin[2], Paul M. Thompson[3], Yize Zhao[4], Li Shen[1**]
and for the Alzheimer's Disease Neuroimaging Initiative

[1] Department of Biostatistics, Epidemiology, and Informatics, University of Pennsylvania Perelman School of Medicine, Philadelphia, PA 19104, USA
[2] Indiana Alzheimer Disease Center, Department of Radiology and Imaging Sciences, Indiana University School of Medicine, Indianapolis, IN 46202, USA
[3] Imaging Genetics Center, Stevens Institute for Neuroimaging and Informatics, University of Southern California School of Medicine, Marina del Rey, CA 90292, USA
[4] Department of Biostatistics, Yale University School of Public Health, New Haven, CT 06511, USA

*These authors contributed equally to this work **Please address correspondence to Li Shen PhD (Li.Shen@pennmedicine.upenn.edu)

1. Introduction

Brain imaging genetics is an emerging research field aiming to reveal the genetic basis of brain traits captured by imaging data. Inspired by heritability analysis, the concept of morphometricity was recently introduced to assess trait association with whole brain morphology. In this study, we extend the concept of morphometricity from its original definition at the whole brain level to a more focal level based on a region of interest (ROI). We propose a novel framework to identify the SNP-ROI association via regional morphometricity estimation of each studied single nucleotide polymorphism (SNP). We perform an empirical study on the structural MRI and genotyping data from a landmark Alzheimer's disease (AD) biobank; and yield promising results. Our findings indicate that the AD-related SNPs have higher overall regional morphometricity estimates than the SNPs not yet related to AD.

2. Methods

Given a trait, its morphometricity is defined as the proportion of the trait variation that can be explained by brain morphology (e.g., as captured by measurements derived from structural brain MRI scans).

Instead of computing global morphometricity at the whole brain level, we calculate regional morphometricity at the ROI level. Given an ROI and a SNP (i.e., a genetic trait), we propose to calculate the ROI-based regional morphometricity of the SNP to examine the SNP-ROI association. To achieve this goal, we design two approaches to calculate the anatomic similarity matrix (ASM):

- Approach 1: We extract a single ROI measure for each subject (i.e., average of all the voxel measures in the ROI; see Figure 1(d)), and use that to compute the ASM.
- Approach 2: We calculate the ASM using all the voxel measures with the ROI (see Figure 1(e)).

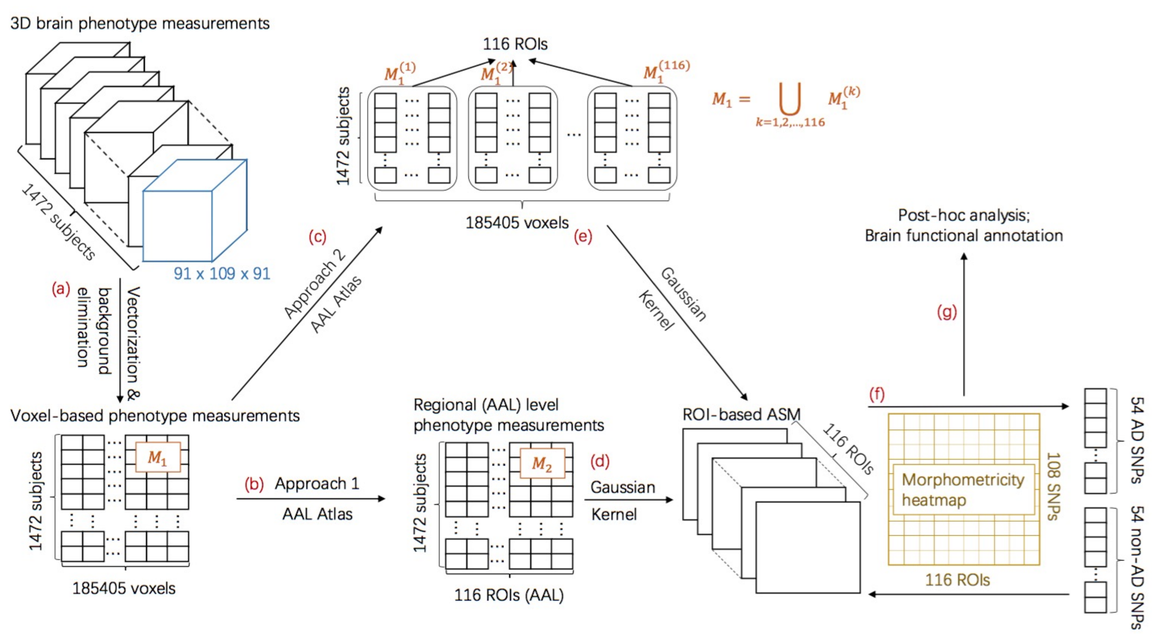

Figure 1 Pipeline for genetic variants prioritization evaluation.

Acknowledgements:

This work was supported in part by the National Institutes of Health [RF1 AG068191, U01 AG068057, R01 LM013463, R01 AG071470, R01 AG058854, P30 AG010133, S10 OD023495]. Data used in this study were obtained from the Alzheimer's Disease Neuroimaging Initiative database (adni.loni.usc.edu), which was funded by NIH U01 AG024904.

3. Results

The genotyping data, demographic data and imaging data used in the preparation of this article were obtained from the Alzheimer's Disease Neuroimaging Initiative (ADNI) database.

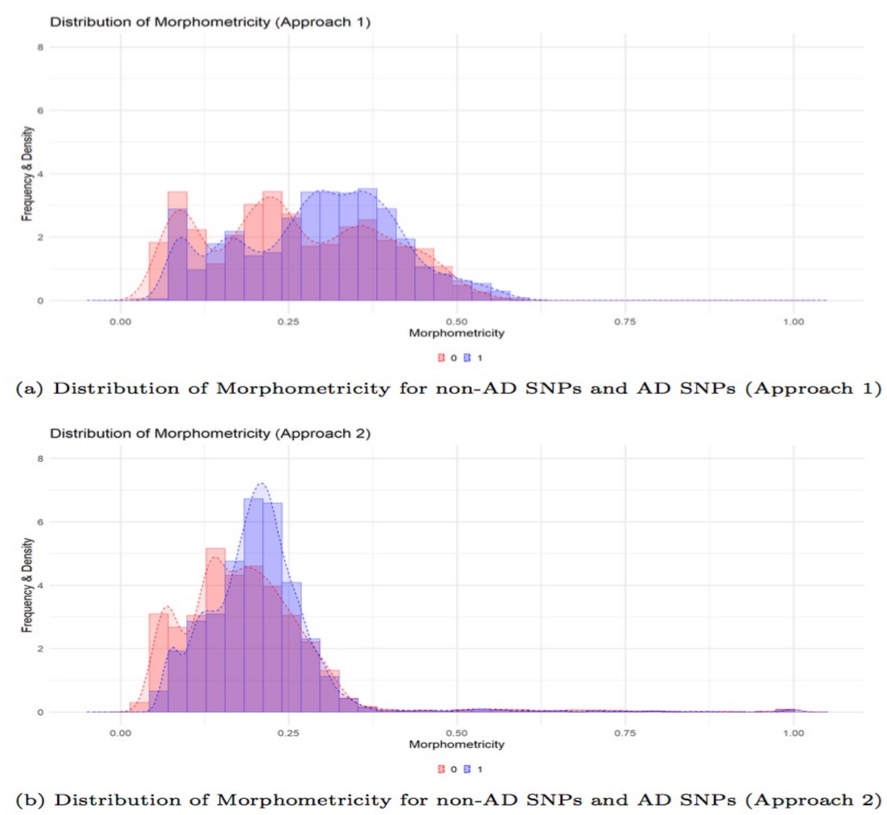

(a) Distribution of Morphometricity for non-AD SNPs and AD SNPs (Approach 1)

(b) Distribution of Morphometricity for non-AD SNPs and AD SNPs (Approach 2)

Figure 2 shows comparison of histogram and density plot for non-AD SNPs and AD SNPs morphometricity using Approach 1 and Approach 2 respectively. Although a large proportion of SNP morphometricity overlaps with each other, the distribution for the AD related SNP group shows an overall higher morphometricity than the non-AD SNP group.

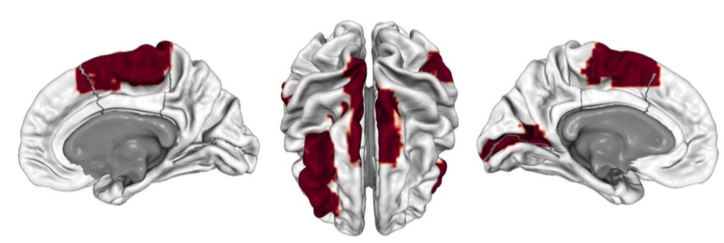

Figure 3 shows significant ROIs in Approach 2 after the Fisher's exact test. This brain map highlights the ROIs that are significant (p-value < 0.05) evaluated by the Fisher's exact test.

4. Conclusions

We proposed a novel strategy to identify SNP-ROI associations via regional morphometricity by extending the existing morphometricity work from its original definition at the whole brain level to a more focal level based on a region of interest (ROI). We proposed two approaches to incorporate ROI-level morphometric information. We performed an empirical study on the structural MRI and genotyping data from the landmark ADNI biobank; and yielded promising results. Our findings indicated that the AD-related SNPs had higher overall regional morphometricity estimates than the SNPs not yet related to AD. This observation suggests that the variances of AD SNPs can be explained more by regional morphometric features than non-AD SNPs, supporting the value of imaging traits as targets in studying AD genetics. In addition, we identified 11 ROIs, where the AD/non-AD SNPs and significant/insignificant morphometricity estimation of the corresponding SNPs in these ROIs were dependent. Supplementary motor area (SMA) and dorsolateral prefrontal cortex (DPC) were enriched by these ROIs. Our results also demonstrated that the proposed Approach 2 captured the ROI information more accurately than Approach 1, and thus had improved power to detect imaging genetic associations.